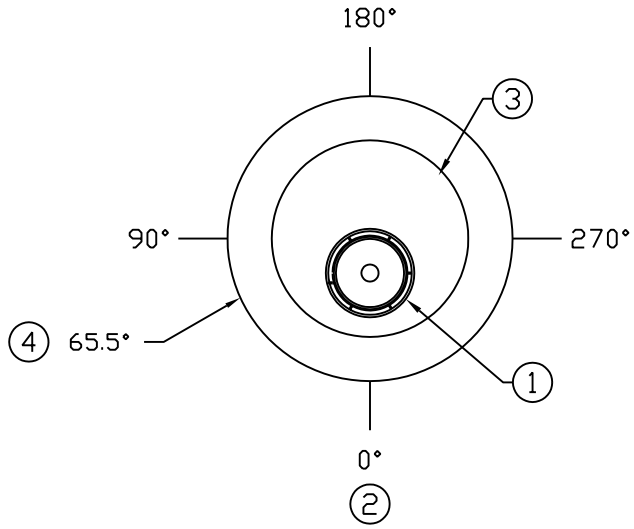

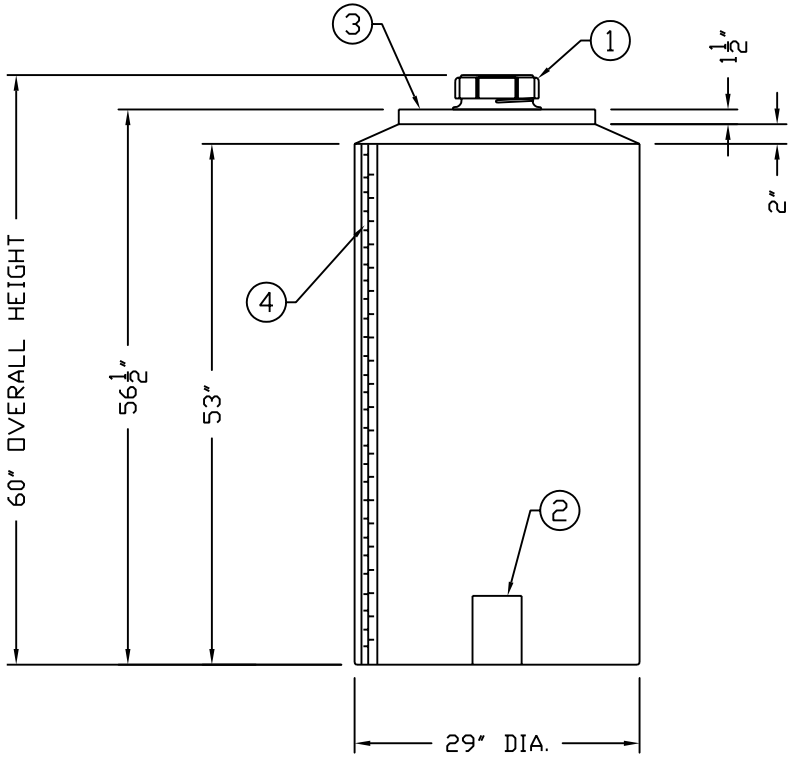

ACCESSORIES					
MK	SIZE	DESCRIPTION	DEG	ELEV	DOME

NOTES:
1 7" THREADED ACCESS OPENING
2 5" x 7" BOTTOM FITTING FLAT
3 20" DIA. MANWAY FLAT
4 MOLDED IN VOLUME MARKER (5 GAL. INCREMENTS)

REV	REVISION DESCRIPTION	REV DATE

Assmann CORPORATION OF AMERICA
300 N TAYLOR ROAD
GARRETT, IN 46738
PHONE: (260) 357-3181
FAX: (260) 357-3738

RESIN USED: - - POLYETHYLENE

TANK DESIGNED SPECIFIC GRAVITY - SP.G. MAX

TANK WEIGHT LBS.

TANK COLOR -

TITLE ICT 140 GAL. VERTICAL STORAGE TANK WITH 7" LID

DRAWN BY: S ROWLISON | DRAWN DATE: 1/13/06 | SALES ORDER#

ASSMANN CORPORATION

ALL DIMENSIONS ARE IN INCHES AND ARE ±3%

DWG NUMBER: ICT 140 (7) | REV Ø