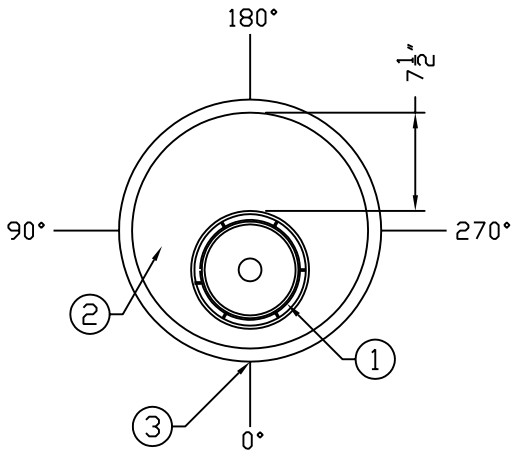

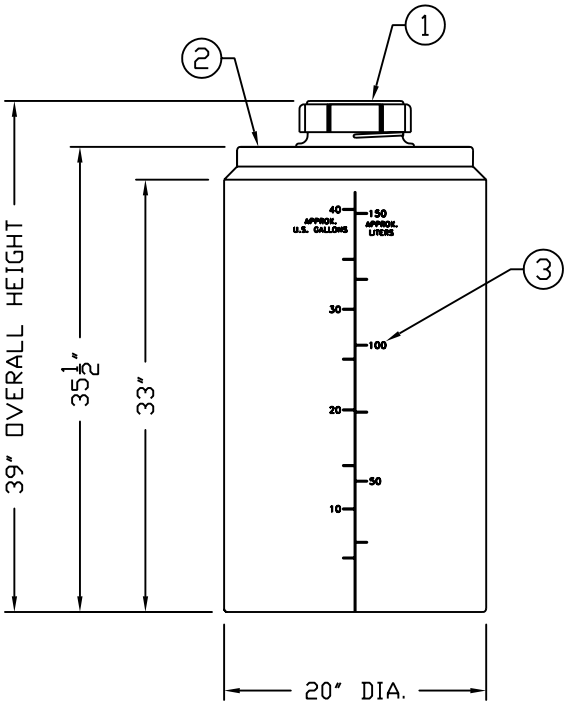

ACCESSORIES					
MK	SIZE	DESCRIPTION	DEG	ELEV	DOME

NOTES:
1 7" ACCESS W/ THREADED CAP
2 18" DIA. MANWAY FLAT
3 MOLDED IN VOLUME MARKER (5 GAL. INCREMENTS)

REV	REVISION DESCRIPTION	REV DATE
A	1 ADDED REVISED MOLDED IN GRADUATION 2 UPDATED DRAWING TITLE BLOCK	10/9/05dam

Assmann CORPORATION OF AMERICA
300 N TAYLOR ROAD
GARRETT, IN 46738
PHONE: (260) 357-3181
FAX: (260) 357-3738

RESIN USED: - - POLYETHYLENE
TANK DESIGNED SPECIFIC GRAVITY - SP.G. MAX
TANK WEIGHT - LBS.
TANK COLOR -

TITLE ICT 40 GAL. VERTICAL STORAGE TANK WITH 7" LID

DRAWN BY: S. ROWLISON
DRAWN DATE: 9/9/99
SALES ORDER#

ASSMANN CORPORATION

ALL DIMENSIONS ARE IN INCHES AND ARE ±3%

DWG NUMBER: ICT40 (7)
REV A