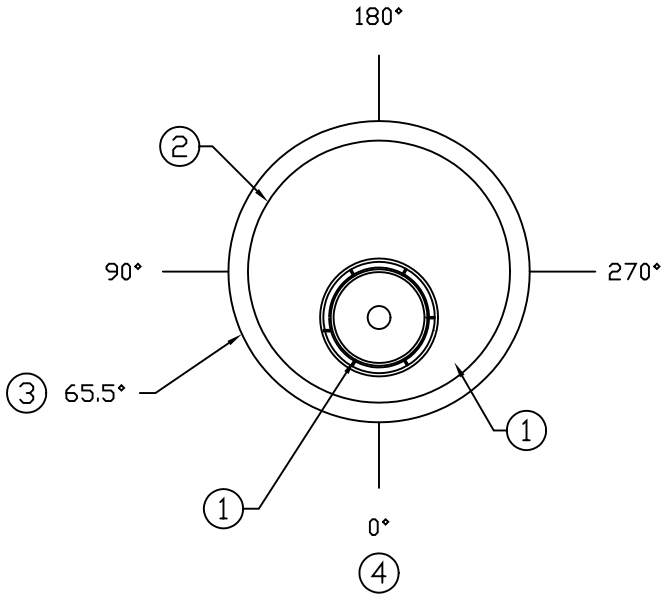


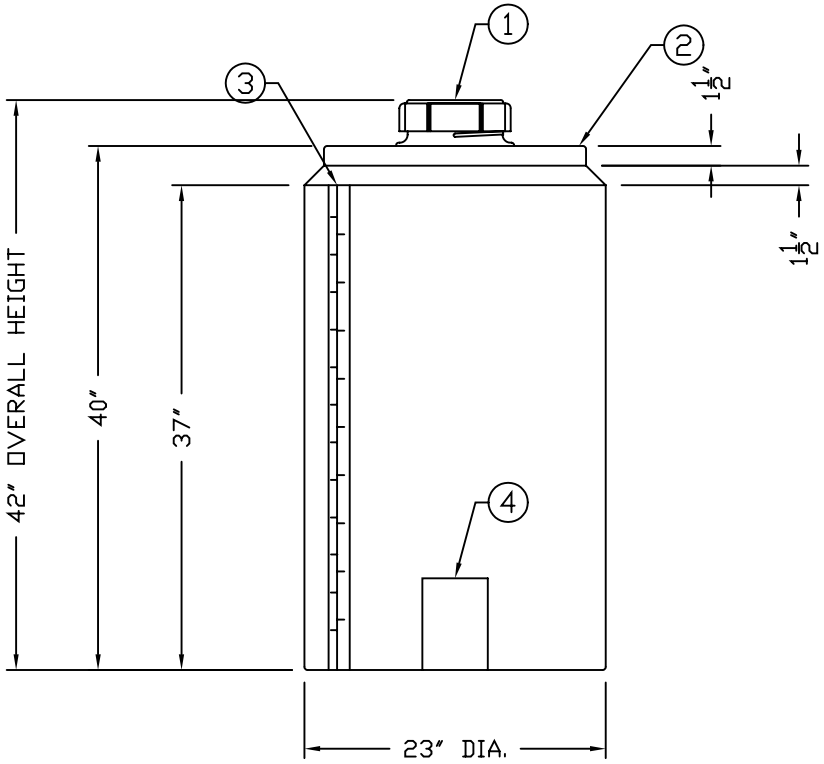


| ACCESSORIES | | | | | |
|---|---|---|---|---|---|
| MK | SIZE | DESCRIPTION | DEG | ELEV | DOME |
| | | | | | |
| | | | | | |
| | | | | | |
| | | | | | |
| | | | | | |
| | | | | | |
| | | | | | |
| | | | | | |
| | | | | | |
| | | | | | |

NOTES:
1 7" ACCESS W/ THREADED CAP
2 20" DIA. MANWAY FLAT
3 MOLDED IN VOLUME MARKER (5 GAL. INCREMENTS)
4 5" x 7" LOWER FITTING FLAT

| REV | REVISION DESCRIPTION | REV DATE |
|---|---|---|
| | | |

Assmann CORPORATION OF AMERICA
300 N TAYLOR ROAD
GARRETT, IN 46738
PHONE: (260) 357-3181
FAX: (260) 357-3738

RESIN USED: – – POLYETHYLENE

TANK DESIGNED SPECIFIC GRAVITY – SP.G. MAX

TANK WEIGHT LBS.

TANK COLOR –

TITLE ICT 60 (7) GALLON VERTICAL STORAGE TANK

| DRAWN BY: | DRAWN DATE: | SALES ORDER# |
|---|---|---|
| D. CRAGER | 5/31/97 | |

ASSMANN CORPORATION

ALL DIMENSIONS ARE IN INCHES AND ARE ±3%

DWG NUMBER: ICT 60 (7) REV –