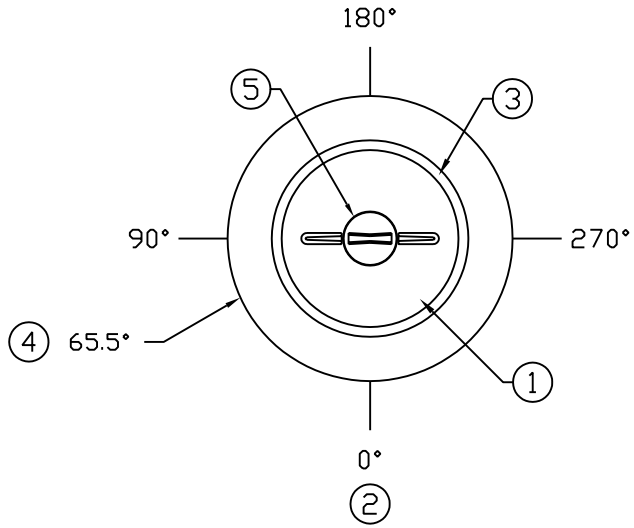

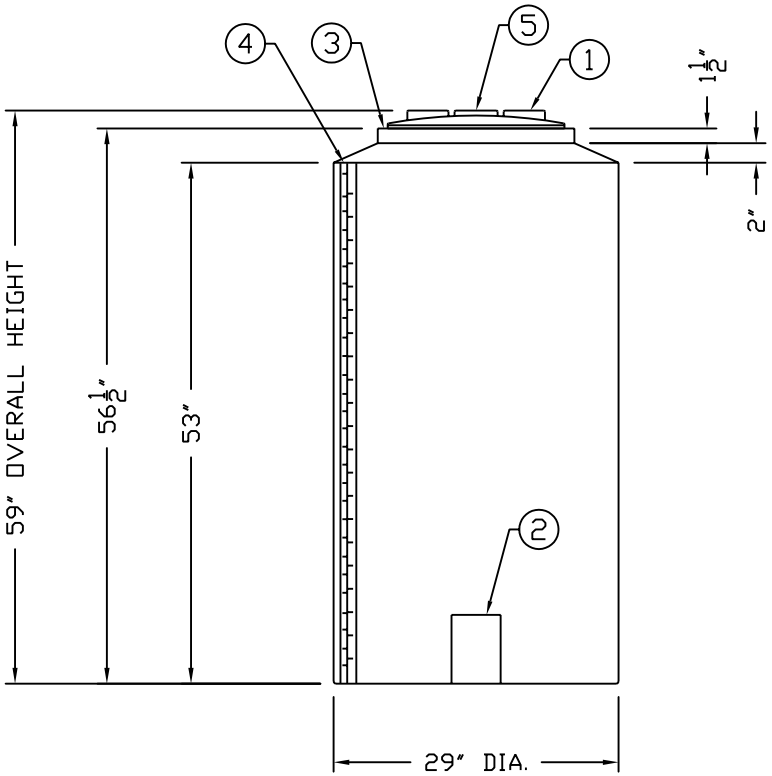

ACCESSORIES					
MK	SIZE	DESCRIPTION	DEG	ELEV	DOME

NOTES:
1 16" ACESS W/ THREADED CAP
2 5" x 7" BOTTOM FITTING FLAT
3 20" DIA. MANWAY FLAT
4 MOLDED IN VOLUME MARKER (5 GAL. INCREMENTS)
5 REMOVABLE AIR BREATHER CAP

REV	REVISION DESCRIPTION	REV DATE
A	1 ADDED REVISED MOLDED IN GRADUATION 2 UPDATED DRAWING TITLE BLOCK 3 ADDED DRAWING NOTES 4 REVISED LOWER FITTING FLAT DIMENSIONS	10/9/05dam

Assmann CORPORATION OF AMERICA
300 N TAYLOR ROAD
GARRETT, IN 46738
PHONE: (260) 357-3181
FAX: (260) 357-3738

RESIN USED: - - POLYETHYLENE
TANK DESIGNED SPECIFIC GRAVITY - SP.G. MAX
TANK WEIGHT LBS.
TANK COLOR -

TITLE ICT 140 GALLON VERTICAL STORAGE TANK

DRAWN BY: D. CRAGER
DRAWN DATE: 11/14/95
SALES ORDER#

ASSMANN CORPORATION

ALL DIMENSIONS ARE IN INCHES AND ARE ±3%

DWG NUMBER: ICT140
REV A