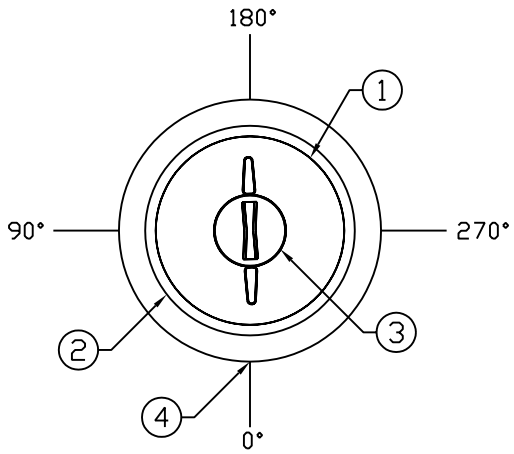

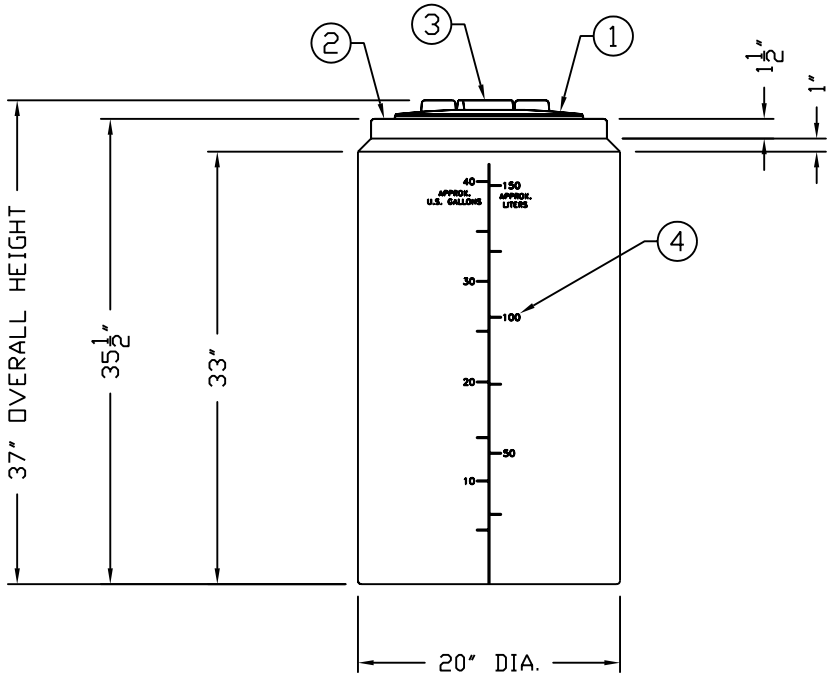

ACCESSORIES					
MK	SIZE	DESCRIPTION	DEG	ELEV	DOME

NOTES:
1 16" MANWAY W/ THREADED LID & RIM
2 18" DIA. MANWAY FLAT
3 REMOVABLE AIR BREATHER
4 MOLDED IN VOLUME MARKER (5 GAL. INCREMENTS)

REV	REVISION DESCRIPTION	REV DATE
B	1 ADDED REVISED MOLDED IN GRADUATION 2 UPDATED DRAWING TITLE BLOCK	10/9/05dam
A	1 ADDED MOLDED IN GRADUATION	6/9/05sr

Assmann CORPORATION OF AMERICA
300 N TAYLOR ROAD
GARRETT, IN 46738
PHONE: (260) 357-3181
FAX: (260) 357-3738

RESIN USED: - - POLYETHYLENE

TANK DESIGNED SPECIFIC GRAVITY - SP.G. MAX

TANK WEIGHT LBS.

TANK COLOR -

TITLE ICT 40 GALLON VERTICAL STORAGE TANK

DRAWN BY: S. ROWLISON | DRAWN DATE: 9/9/99 | SALES ORDER#

ASSMANN CORPORATION

ALL DIMENSIONS ARE IN INCHES AND ARE ±3%

DWG NUMBER: ICT 40 | REV B