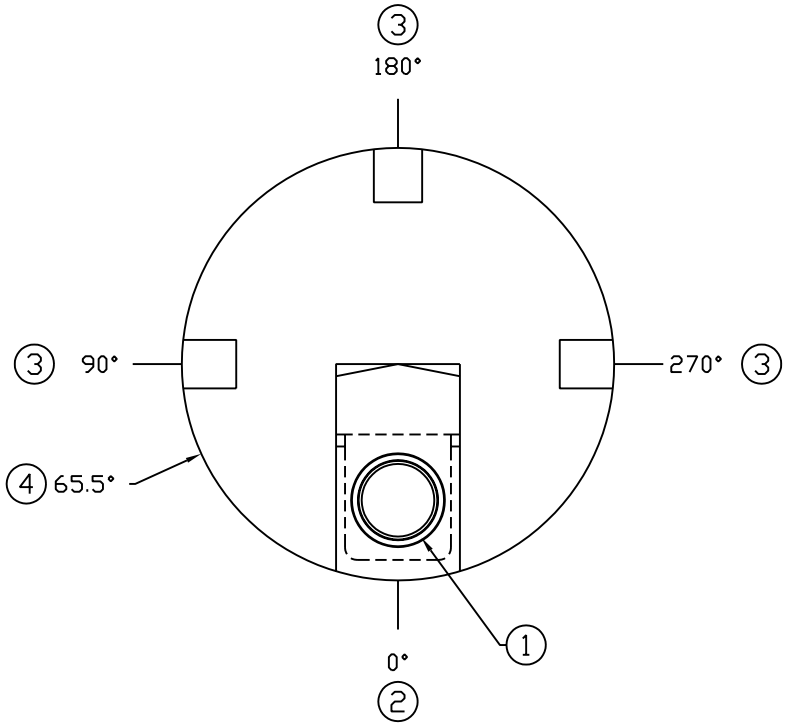

ACCESSORIES					
MK	SIZE	DESCRIPTION	DEG	ELEV	DOME

NOTES:
1 24" MANWAY W/ HINGED COVER
2 41" x 71 1/2" DOME FLAT
3 18" x 18" DOME FLAT (TYP. 3 PLACES)
4 ASW MODEL HAS MOLDED IN VOLUME MARKER (100 GAL. INCREMENTS). ACA MODEL HAS OPTIONAL STICKER

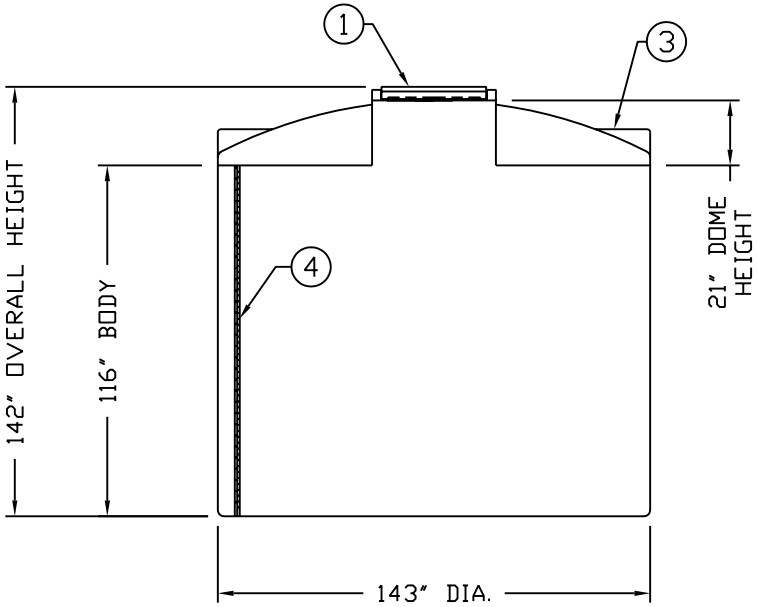

REV	REVISION DESCRIPTION	REV DATE
A	1 UPDATED DRAWING TITLEBLOCK 2 REVISED DRAWING NOTES	11/20/05dam

Assmann CORPORATION OF AMERICA
300 N TAYLOR ROAD
GARRETT, IN 46738
PHONE: (260) 357-3181
FAX: (260) 357-3738

RESIN USED: - - POLYETHYLENE

TANK DESIGNED SPECIFIC GRAVITY - SP.G. MAX

TANK WEIGHT - LBS.

TANK COLOR -

TITLE ICT 8000 GAL. VERTICAL STORAGE TANK

DRAWN BY: D. CRAGER | DRAWN DATE: 11/14/95 | SALES ORDER#

ASSMANN CORPORATION

ALL DIMENSIONS ARE IN INCHES AND ARE ±3%

DWG NUMBER: ICT 8000 | REV A