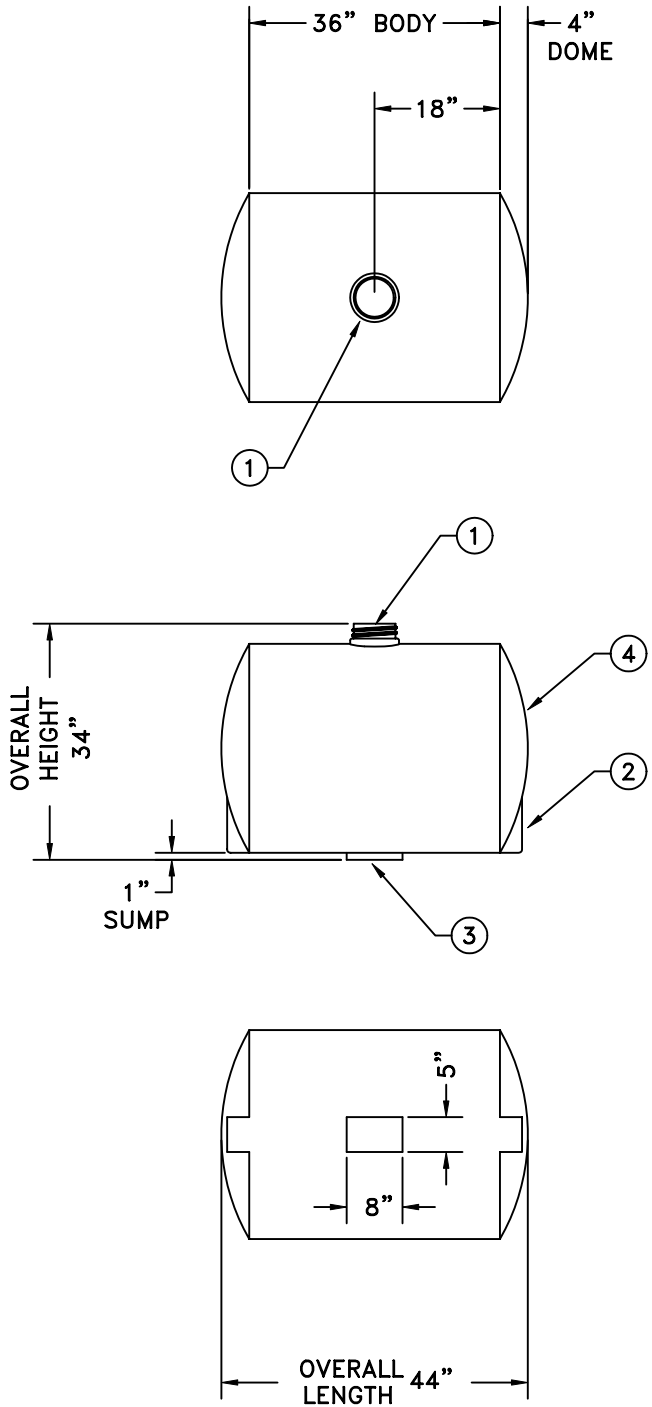

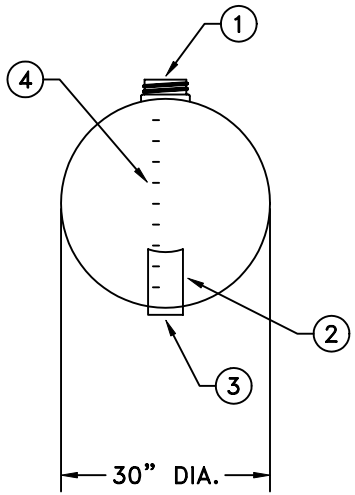

ACCESSORIES

MK	SIZE		DEG	ELEV	DOME

NOTES:

1. 5 1/2" ACCESS WITH THREADED COVER
2. 5" X 8" END FLAT SPOTS (2 PLACES)
3. 5" X 8" X 1" DEEP BOTTOM SUMP
4. MOLDED IN VOLUME MARKER

DWG TITLE: IHT 110 gal. CYLINDRICAL HORIZONTAL STORAGE TANK		
SCALE NONE	Assmann CORPORATION OF AMERICA	DR D. CRAGER
DATE 3/28/93		CUSTOMER APPROVAL
		DWG NO IHT 110