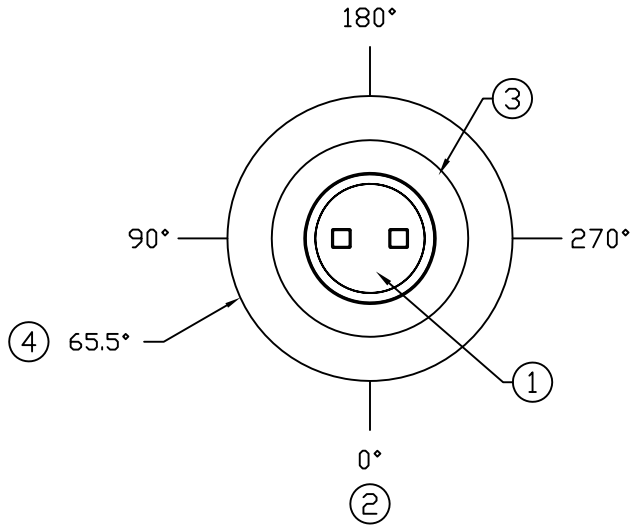

ACCESSORIES					
MK	SIZE	DESCRIPTION	DEG	ELEV	DOME

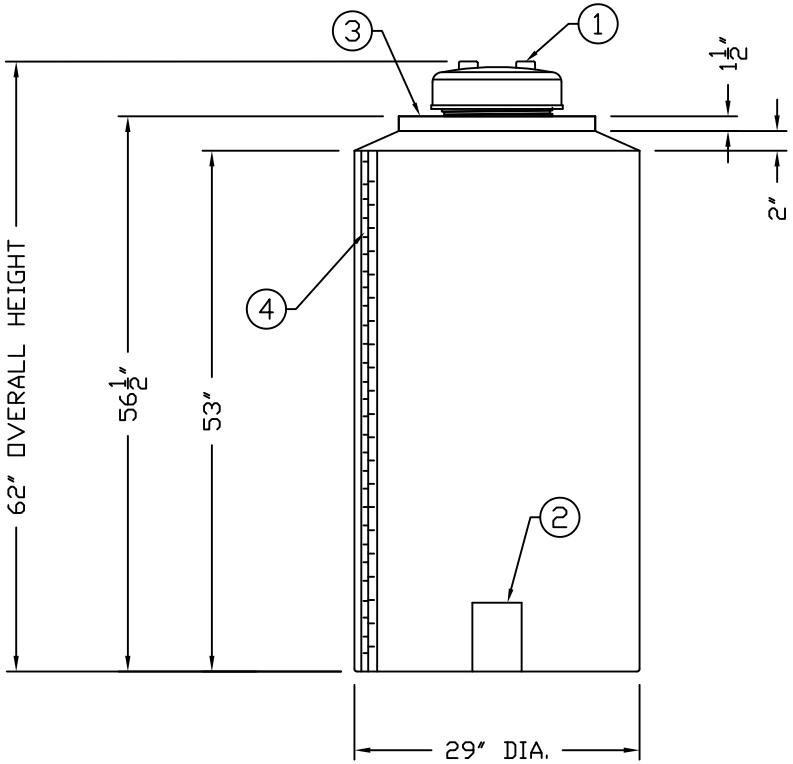

NOTES:
1 11" PE THREADED CAP WITH PUSH PLATE & XLPE GASKET
2 5" x 7" BOTTOM FITTING FLAT
3 20" DIA. MANWAY FLAT
4 MOLDED IN VOLUME MARKER (5 GAL. INCREMENTS)

PECAP 11 DETAIL:

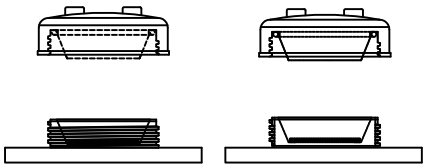

REV	REVISION DESCRIPTION	REV DATE

Assmann CORPORATION OF AMERICA
300 N TAYLOR ROAD
GARRETT, IN 46738
PHONE: (260) 357-3181
FAX: (260) 357-3738

RESIN USED: – – POLYETHYLENE

TANK DESIGNED SPECIFIC GRAVITY – SP.G. MAX

TANK WEIGHT LBS.

TANK COLOR –

TITLE ICT 140 GAL. VERTICAL STORAGE TANK 11" PE CAP (FUME TIGHT)

DRAWN BY: M.COMBS | DRAWN DATE: 10/21/2015 | SALES ORDER#

ASSMANN CORPORATION

ALL DIMENSIONS ARE IN INCHES AND ARE ±3%

DWG NUMBER: ICT 140 (PECAP11) | REV Ø