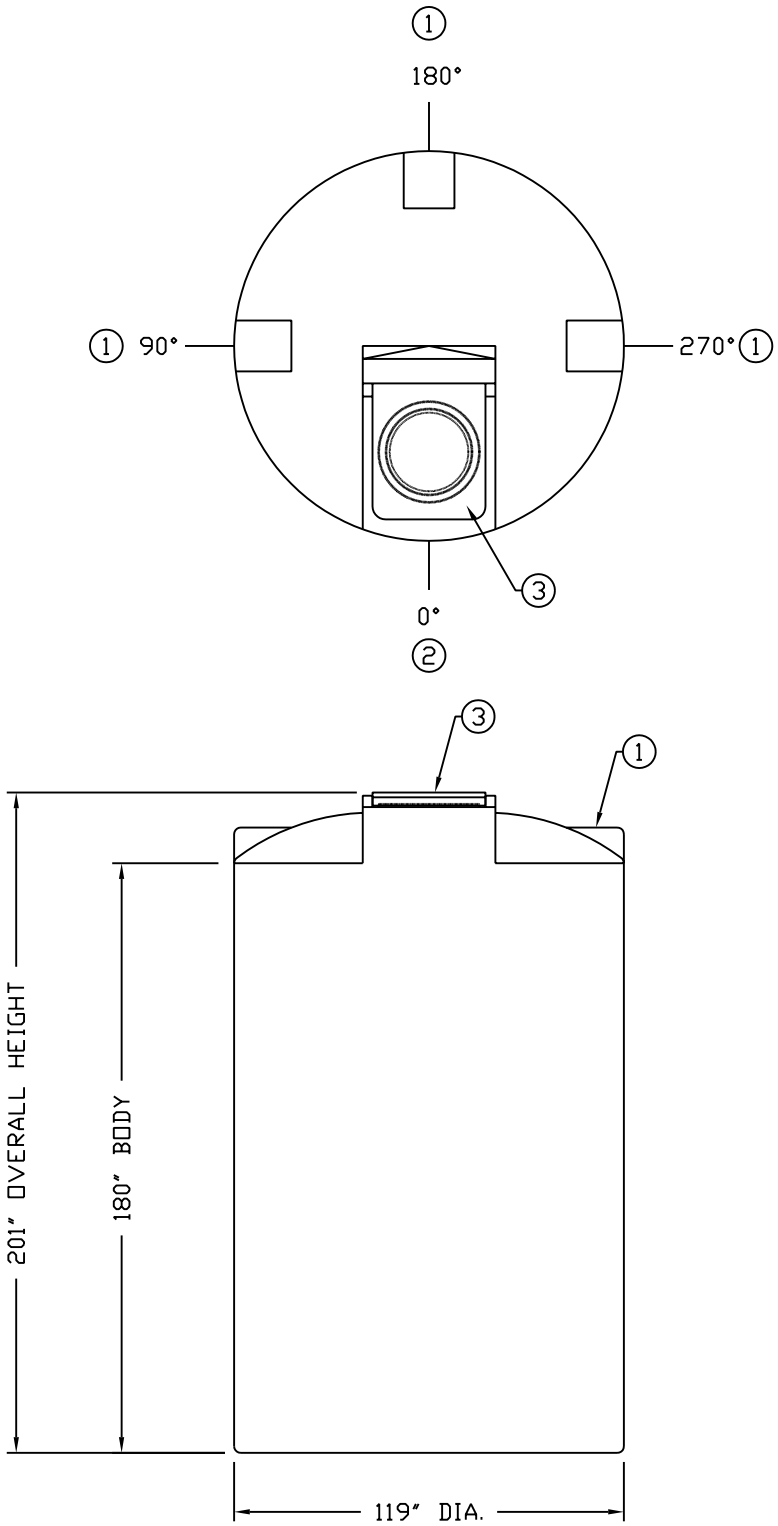

ACCESSORIES					
MK	SIZE	DESCRIPTION	DEG	ELEV	DOME

NOTES:
1 15 1/2" X 17 1/2" DOME FLATS (3 PLACES)
2 40 1/2" X 52" DOME FLAT
3 24" HINGED MANWAY COVER

REV	REVISION DESCRIPTION	REV DATE

Assmann CORPORATION OF AMERICA
300 N TAYLOR ROAD GARRETT, IN 46738
PHONE (260) 357-3181
FAX (260) 357-3738

RESIN USED: - - POLYETHYLENE

TANK DESIGNED SPECIFIC GRAVITY - SP.G. MAX

TANK WEIGHT - LBS.

TANK COLOR -

TITLE ICT 8410 GALLON VERTICAL STORAGE TANK

DRAWN BY: SROWLISON | DRAWN DATE: 1/22/04 | CUSTOMER APPROVAL

DWG NUMBER: ICT 8410 | REV -

ALL DIMENSIONS ARE IN INCHES AND ARE ±3%