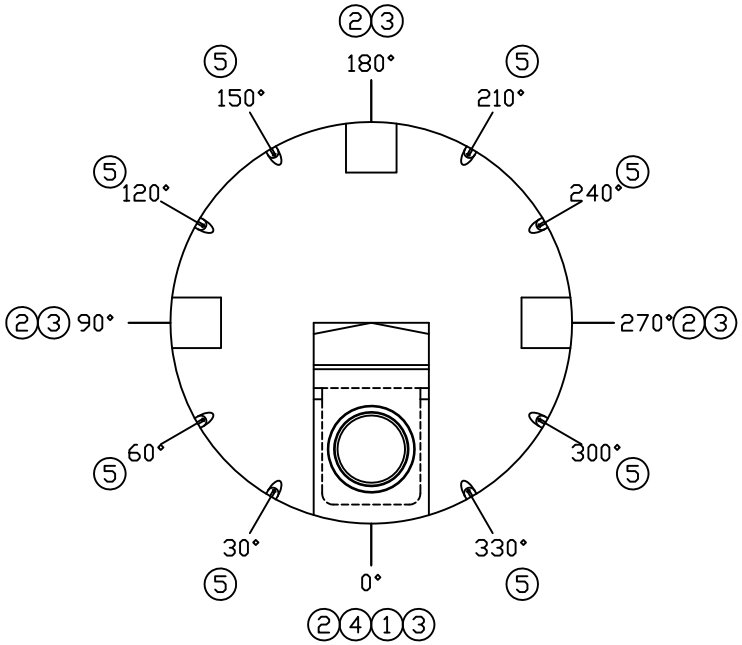


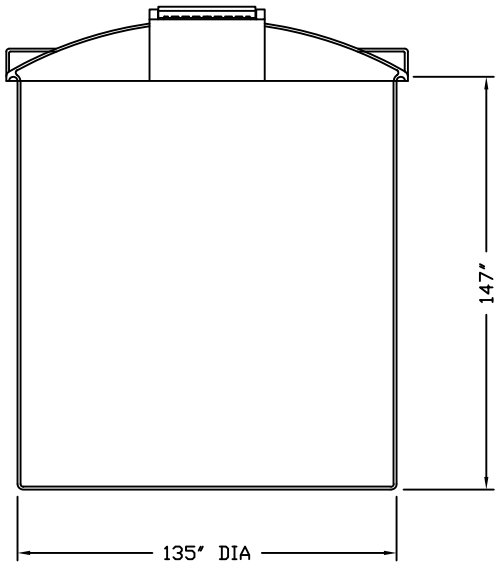


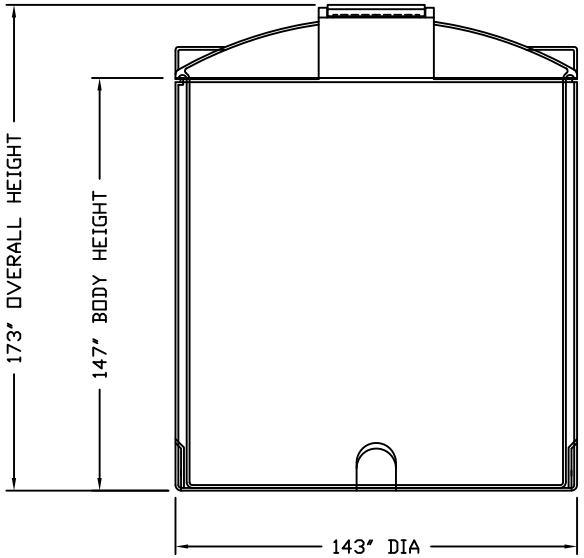


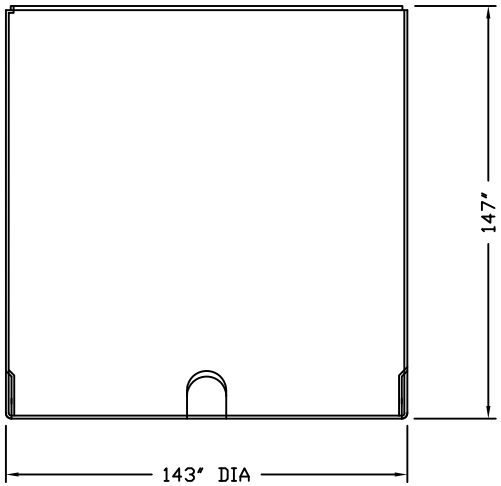


| ACCESSORIES | | | | | |
|---|---|---|---|---|---|
| MK | SIZE | DESCRIPTION | DEG | ELEV | DOME |
| | | | | | |
| | | | | | |
| | | | | | |
| | | | | | |
| | | | | | |
| | | | | | |
| | | | | | |
| | | | | | |

LIP DETAIL

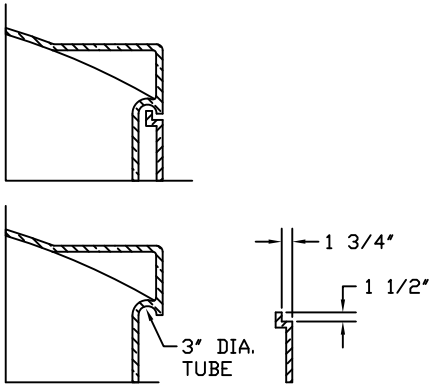


LOWER FLAT SPOT DTL.

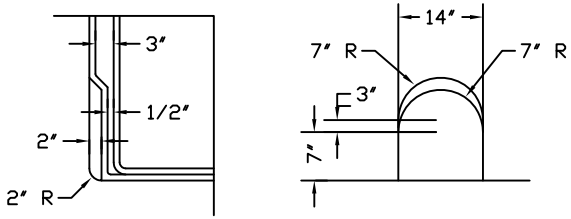


NOTES:
1 LOCATE FITTINGS FROM PLAN VIEW.
2 TANK(S) MUST BE INSTALLED PER ASSMANN
CORPORATION USAGE & GUIDELINES.
3 FLEXIBLE EXPANSION JOINTS MUST BE USED
ON ALL SIDEWALL CONNECTIONS.
4 TANKS ARE BUILT PER ASTM D 1998.

NOTES:
1 24" MANWAY WITH HINGED COVER
2 LOWER FLAT SPOT (4 PLACES)
3 18" X 18" DOME FLAT SPOTS (3 PLACES)
4 MANWAY FLAT
5 ALIGNMENT / LIFTING LUG ASSEMBLY (8 PLACES)

| REV | REVISION DESCRIPTION | REV DATE |
|---|---|---|
| | | |

Assmann CORPORATION OF AMERICA
300 N TAYLOR ROAD
GARRETT, IN 46738
PHONE: (260) 357-3181
FAX: (260) 357-3738

SALES ORDER

OVERALL TANK WEIGHT LBS.

| PRIMARY VESSEL | SPECIFIC GRAVITY | SP.G. MAX | SECONDARY VESSEL | SPECIFIC GRAVITY | SP.G. MAX |
|---|---|---|---|---|---|
| RESIN USED: | TANK WEIGHT | LBS. | RESIN USED: | TANK WEIGHT | LBS. |
| POLYETHYLENE | TANK COLOR | | POLYETHYLENE | TANK COLOR | |

TITLE IMT 8850 GAL. DOUBLE WALL STORAGE TANK

DRAWN BY: SROWLISON

DRAWN DATE: 11/30/09

DWG NUMBER: IMT8850

REV Ø

ALL DIMENSIONS ARE IN INCHES AND ARE ±3%