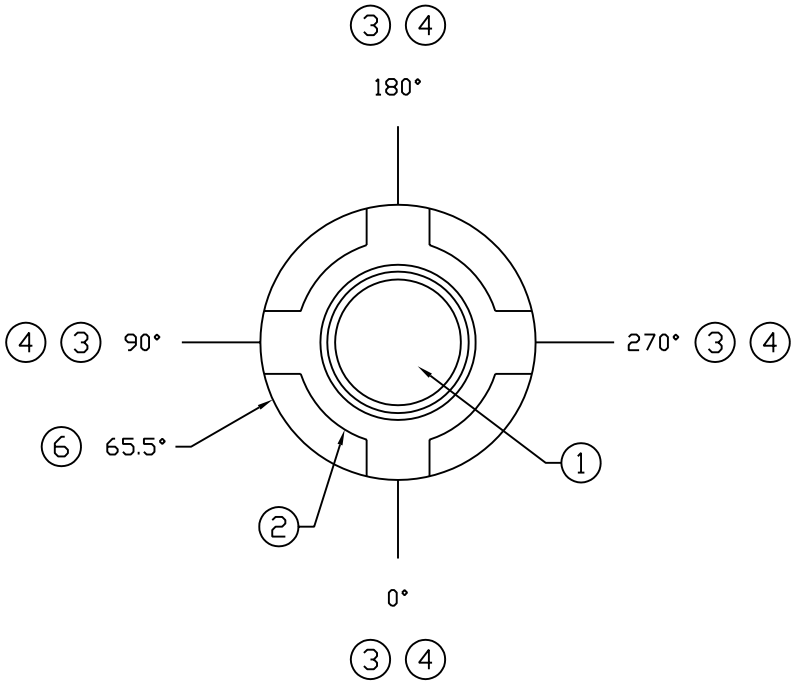

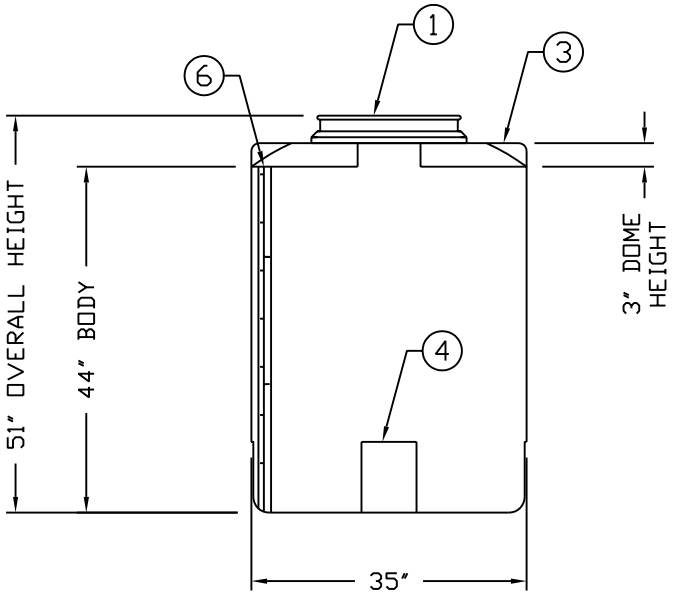

ACCESSORIES					
MK	SIZE	DESCRIPTION	DEG	ELEV	DOME

NOTES:

1) 16" MAWAY WITH LEVERLOCKING COVER
2) MANWAY FLAT 26" DIAMETER
3) UPPER FITTING FLATS 8" X 8" (4 PLACES)
4) LOWER FLATS 7" X 9" (4 PLACES)
5) 4.07 GALLONS PER INCH CALCULATED
6) MOLDED IN VOLUME MARKER (25 GAL. INCREMENTS)

REV	REVISION DESCRIPTION	REV DATE
A	1 REVISED DRAWING NOTES 2 ADDED NOTE DETAILS ON FRONT VIEW	11/20/05dam

Asmann CORPORATION OF AMERICA
300 N TAYLOR ROAD
GARRETT, IN 46738
PHONE: (260) 357-3181
FAX: (260) 357-3738

RESIN USED: - - POLYETHYLENE

TANK DESIGNED SPECIFIC GRAVITY - SP.G. MAX

TANK WEIGHT - LBS.

TANK COLOR -

TITLE ICT 175 GAL VERTICAL STORAGE TANK

DRAWN BY: S ROWLISON | DRAWN DATE: 4/26/05 | CUSTOMER APPROVAL

DWG NUMBER: ICT 175 | REV A

ALL DIMENSIONS ARE IN INCHES AND ARE ±3%