ACCESSORIES					
MK	SIZE	DESCRIPTION	DEG	ELEV	DOME

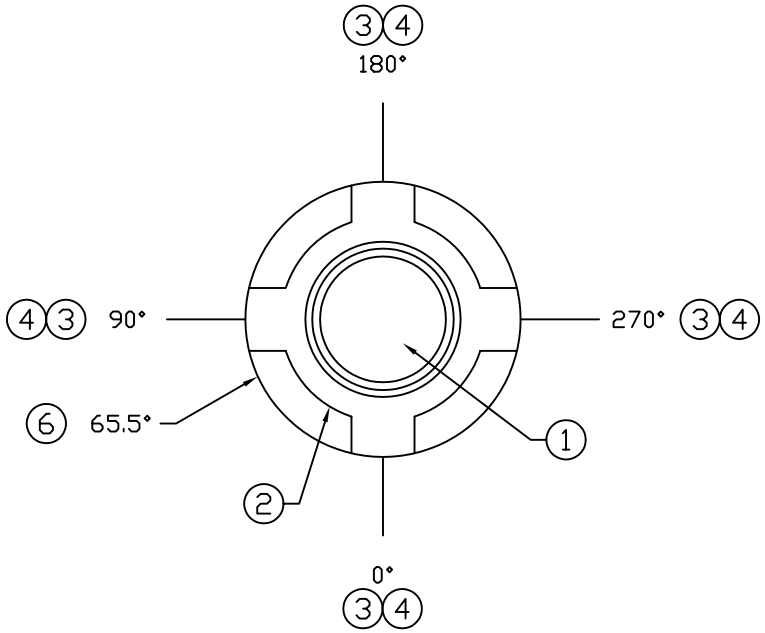

NOTES:
1) 16" MAWAY WITH LEVERLOCKING COVER
2) MANWAY FLAT 26" DIAMETER
3) UPPER FITTING FLATS 8" X 8" (4 PLACES)
4) LOWER FLATS 7" X 9" (4 PLACES)
5) MOLDED IN VOLUME MARKER (25 GAL. INCREMENTS)

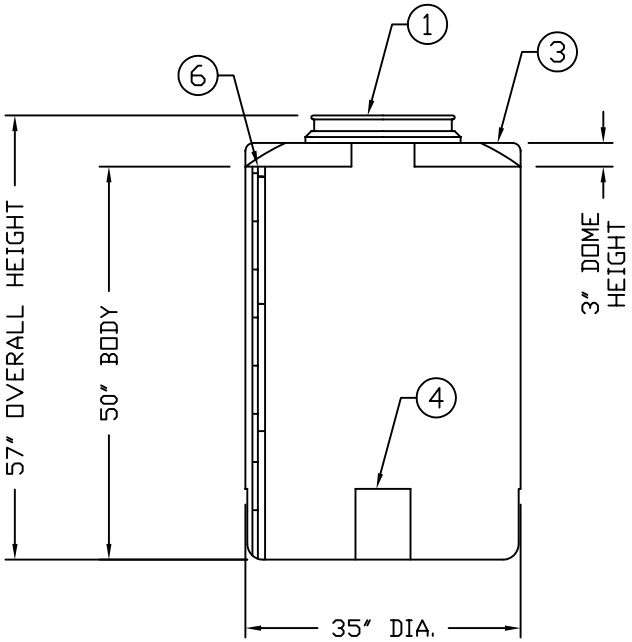

REV	REVISION DESCRIPTION	REV DATE
A	1 REVISED DRAWING NOTES 2 ADDED NOTE DETAILS ON FRONT VIEW	11/20/05dam

Aoamann CORPORATION OF AMERICA
300 N TAYLOR ROAD
GARRETT, IN 46738
PHONE: (260) 357-3181
FAX: (260) 357-3738

RESIN USED: – – POLYETHYLENE

TANK DESIGNED SPECIFIC GRAVITY – SP.G. MAX

TANK WEIGHT – LBS.

TANK COLOR –

TITLE ICT 200 GAL (35" DIA) VERTICAL STORAGE TANK

DRAWN BY: D. MYERS | DRAWN DATE: 6/8/05 | CUSTOMER APPROVAL

DWG NUMBER: ICT 200 (35) | REV A

ALL DIMENSIONS ARE IN INCHES AND ARE ±3%