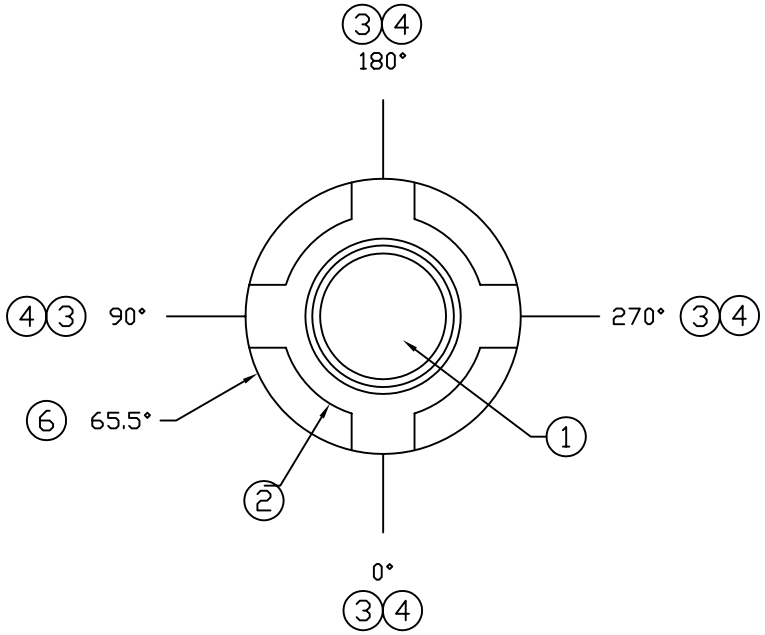


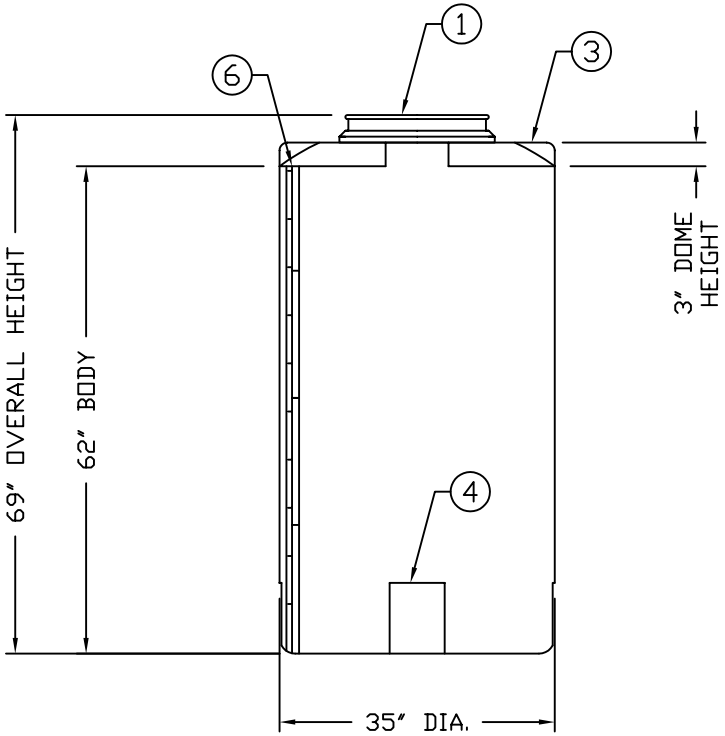


| ACCESSORIES | | | | | |
|---|---|---|---|---|---|
| MK | SIZE | DESCRIPTION | DEG | ELEV | DOME |
| | | | | | |
| | | | | | |
| | | | | | |
| | | | | | |
| | | | | | |
| | | | | | |
| | | | | | |
| | | | | | |

NOTES:

1) 16" MAWAY WITH LEVERLOCKING COVER
2) MANWAY FLAT 26" DIAMETER
3) UPPER FITTING FLATS 8" X 8" (4 PLACES)
4) LOWER FLATS 7" X 9" (4 PLACES)
5) 4.07 GALLONS PER INCH CALCULATED
6) MOLDED IN VOLUME MARKER (25 GAL. INCREMENTS)

| REV | REVISION DESCRIPTION | REV DATE |
|---|---|---|
| A | 1 REVISED DRAWING NOTES<br>2 ADDED NOTE DETAILS ON FRONT VIEW | 11/20/05dam |


Aoamann CORPORATION OF AMERICA
300 N TAYLOR ROAD
GARRETT, IN 46738
PHONE: (260) 357-3181
FAX: (260) 357-3738


RESIN USED: – – POLYETHYLENE

TANK DESIGNED SPECIFIC GRAVITY – SP.G. MAX

TANK WEIGHT – LBS.

TANK COLOR –

TITLE ICT 250 GAL VERTICAL VERTICAL STORAGE TANK

DRAWN BY: S ROWLISON | DRAWN DATE: 3/7/05 | CUSTOMER APPROVAL

DWG NUMBER: ICT 250 | REV A

ALL DIMENSIONS ARE IN INCHES AND ARE ±3%