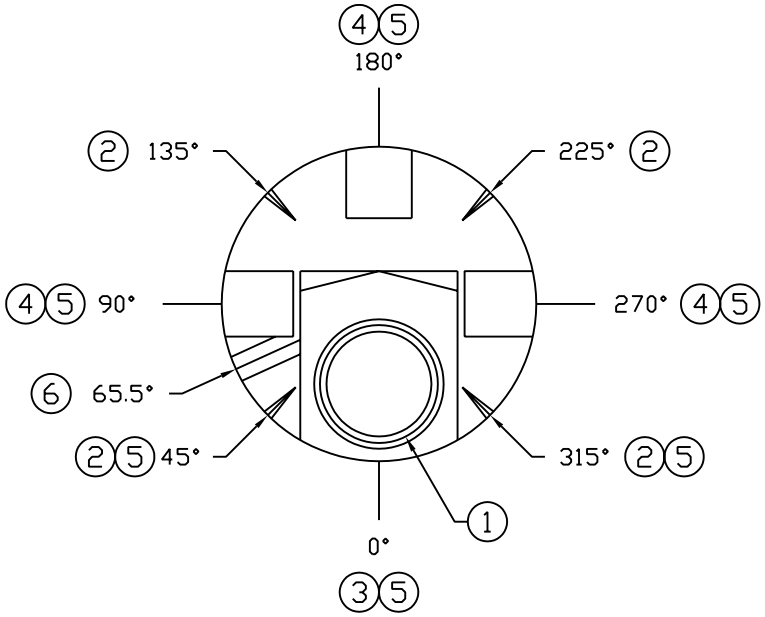

ACCESSORIES					
MK	SIZE	DESCRIPTION	DEG	ELEV	DOME

NOTES:
1 16" MANWAY W/ LEVER LOCK COVER
2 MOLDED IN TIE DOWN GROOVES
3 24" x 29" MANWAY FLAT
4 10" x 10" DOME FLAT (TYP. 3 PLACES)
5 7" x 9" LOWER FLATS (TYP. 6 PLACES)
6 MOLDED IN VOLUME MARKER (25 GAL. INCREMENTS)

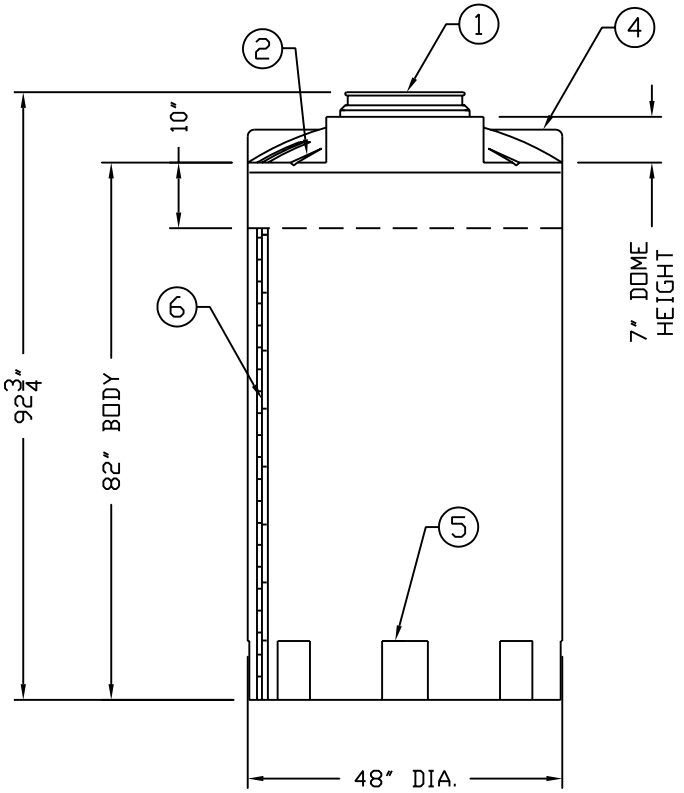

REV	REVISION DESCRIPTION	REV DATE

Assmann CORPORATION OF AMERICA
300 N TAYLOR ROAD
GARRETT, IN 46738
PHONE: (260) 357-3181
FAX: (260) 357-3738

RESIN USED: - - POLYETHYLENE

TANK DESIGNED SPECIFIC GRAVITY - SP.G. MAX

TANK WEIGHT LBS.

TANK COLOR -

TITLE ICT 625 GALLON VERTICAL STORAGE TANK

DRAWN BY: S ROWLISON | DRAWN DATE: 12/14/09 | SALES ORDER#

ASSMANN CORPORATION

ALL DIMENSIONS ARE IN INCHES AND ARE ±3%

DWG NUMBER: ICT 625 | REV Ø