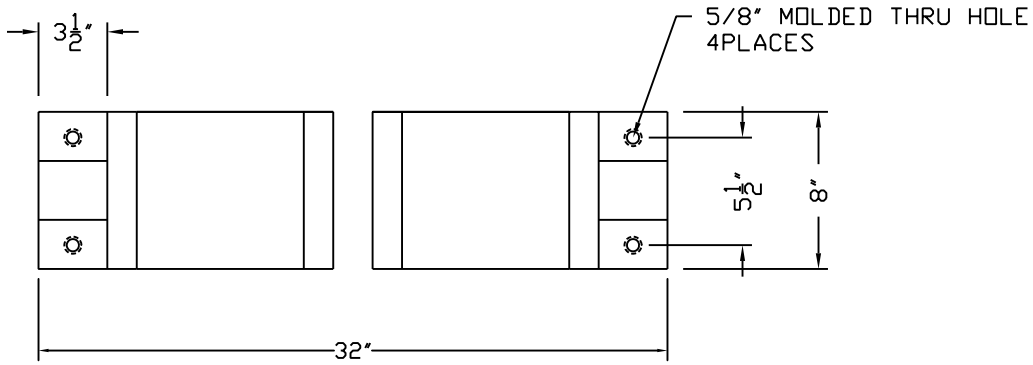

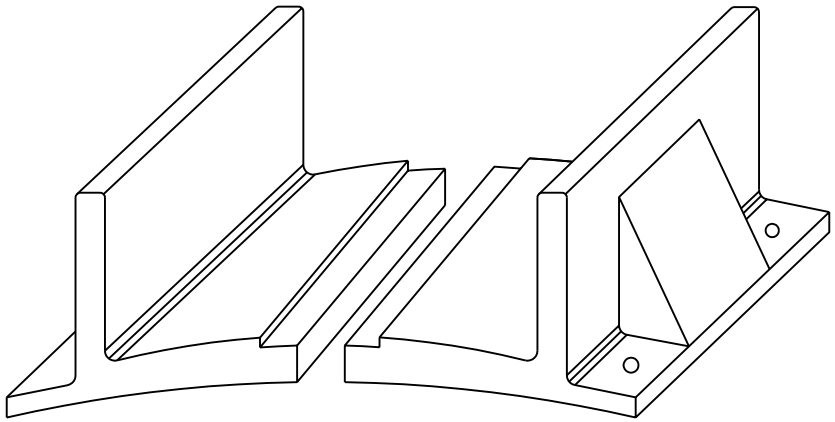

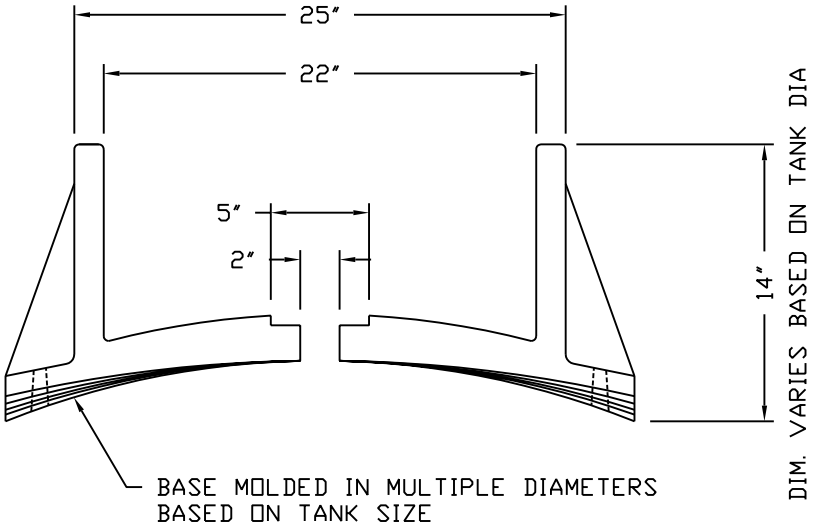

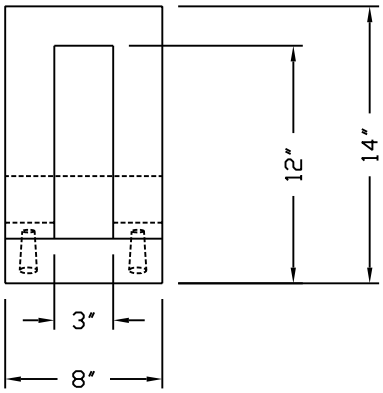

REV	REVISION DESCRIPTION	REV DATE

Aca Aomann CORPORATION OF AMERICA
300 N TAYLOR ROAD
GARRETT, IN 46738
PHONE: (260) 357-3181
FAX: (260) 357-3738

SALES ORDER

DRAWN BY: SROWLISON

DRAWN DATE: 11/17/09

TITLE MOLDED POLYETHYLENE LADDER SUPPORT BRACKET

DWG NUMBER: PE-LB

REV Ø