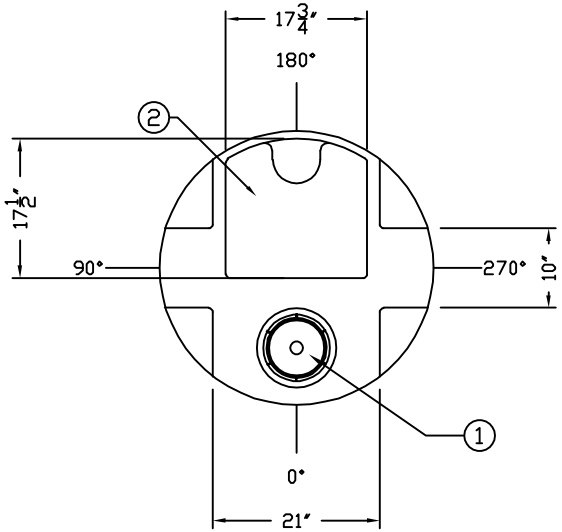

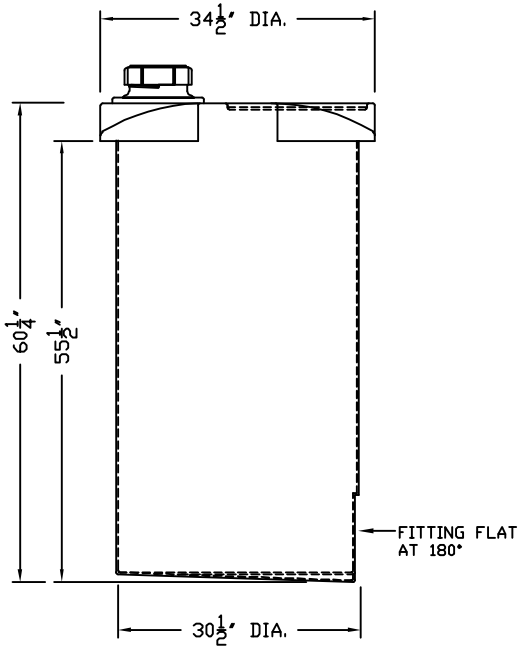

ACCESSORIES					
MK	SIZE	DESCRIPTION	DEG	ELEV	DOME

NOTES:
1 7" ACCESS W/ THREADED LID
2 MOLDED IN PUMP SHELF
3 PRIMARY CALCULATED GALLONS PER INCH: 3.06 GPI
4 SECONDARY CALCULATED GALLONS PER INCH: 3.93 GPI

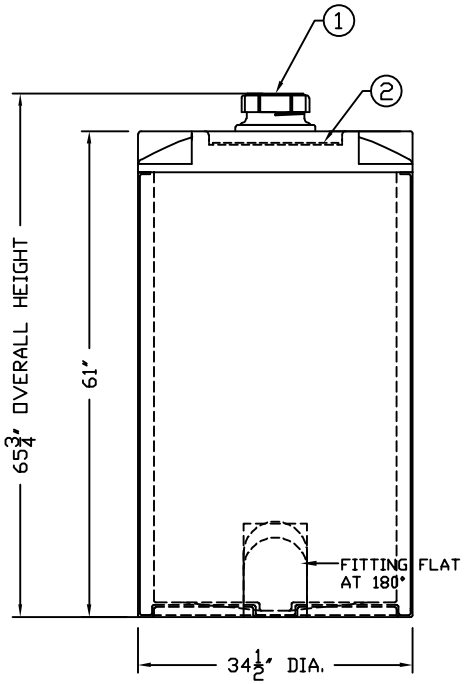

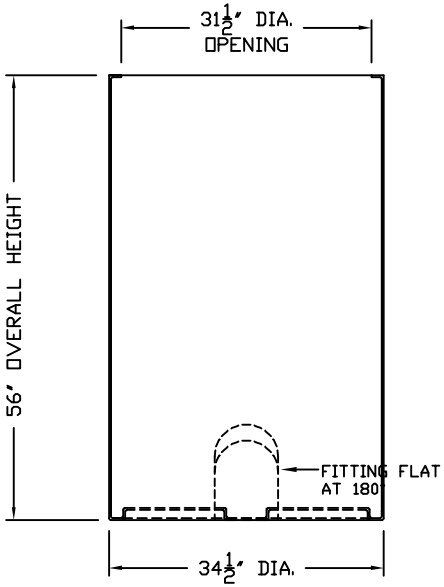

REV	REVISION DESCRIPTION	REV DATE
D	UPDATE SIDEVIEW OF TANK TO SHOW FTG FLAT AT 180°	1/18/25 JL
C	TURNED TANK 180° SO THE ACCESS IS AT 0°	06/12/08 MG
B	ADDED FITTING FLAT TO LOW SIDEWALL	2/6/04 DAM
A	CORRECTED SHELF SIZE/CORRECTED RAISE PORTION AROUND LID	2/6/04 DAM

Ace Aermann CORPORATION OF AMERICA
300 N TAYLOR ROAD
GARRETT, IN 46738
PHONE: (260) 357-3181
FAX: (260) 357-3738

CUSTOMER APPROVAL

OVERALL TANK WEIGHT - LBS.

PRIMARY VESSEL		SECONDARY VESSEL	
SPECIFIC GRAVITY - SP.G. MAX		SPECIFIC GRAVITY - SP.G. MAX	
RESIN USED: - - POLYETHYLENE	TANK WEIGHT - LBS.	RESIN USED: - - POLYETHYLENE	TANK WEIGHT - LBS.
	TANK COLOR -		TANK COLOR -

TITLE IMT 165 GAL.
DOUBLE WALL STORAGE TANK
-

DRAWN BY: D. MYERS
DRAWN DATE: 10/22/03
DWG NUMBER: IMT 165
REV D

ALL DIMENSIONS ARE IN INCHES AND ARE ±3%