ACCESSORIES					
MK	SIZE	DESCRIPTION	DEG	ELEV	DOME

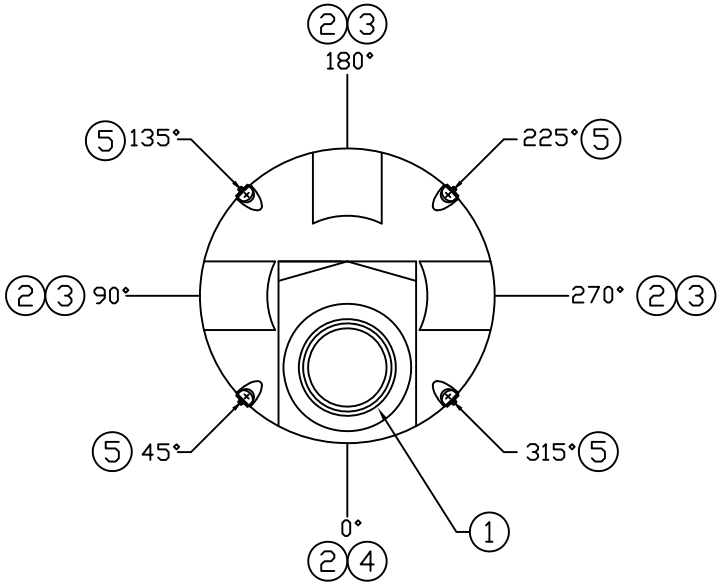

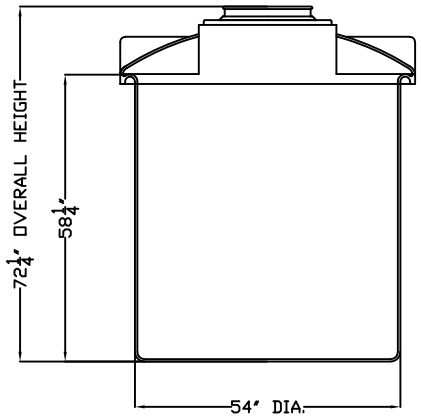

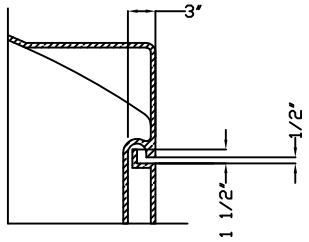

LIP DETAIL

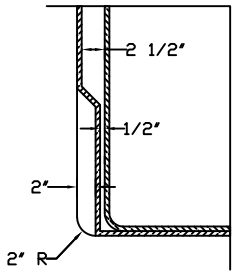

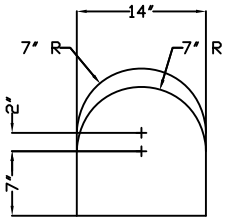

FLAT SPOT DETAIL

NOTES:

1. 16" MANWAY W/ LEVER LOCKING COVER
   OPTIONAL 21" THREADED
2. LOWER FLAT SPOT (4 PLACES)
3. 14" X 14" DOME FLAT SPOT (3 PLACES)
4. 28" X 30" MANWAY FLAT
5. LIFTING LUG ASSEMBLY (4 PLACES)

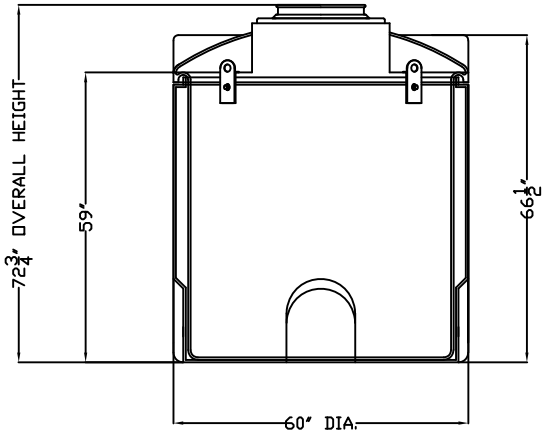

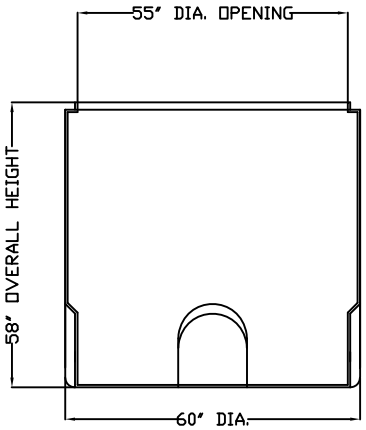

REV	REVISION DESCRIPTION	REV DATE
B	CHANGED LIFTING LUGS TO SIDE TYPE	3/9/2017 SR
A	INSERTED A NEW TITLE BLOCK	06/12/08 MG

Ica Lomann CORPORATION OF AMERICA
300 N TAYLOR ROAD
GARRETT, IN 46738
PHONE: (260) 357-3181
FAX: (260) 357-3738

SALES ORDER

OVERALL TANK WEIGHT - LBS.

PRIMARY VESSEL	SPECIFIC GRAVITY - SP.G. MAX	SECONDARY VESSEL	SPECIFIC GRAVITY - SP.G. MAX
RESIN USED: - - POLYETHYLENE	TANK WEIGHT - LBS.	RESIN USED: - - POLYETHYLENE	TANK WEIGHT - LBS.
	TANK COLOR -		TANK COLOR -

TITLE IMT 550
DOUBLE WALL STORAGE TANK
-

DRAWN BY: D. CRAGER
DRAWN DATE: 10/01/96
DWG NUMBER: IMT 550
REV B

ALL DIMENSIONS ARE IN INCHES AND ARE ±3%