ACCESSORIES					
MK	SIZE	DESCRIPTION	DEG	ELEV	DOME

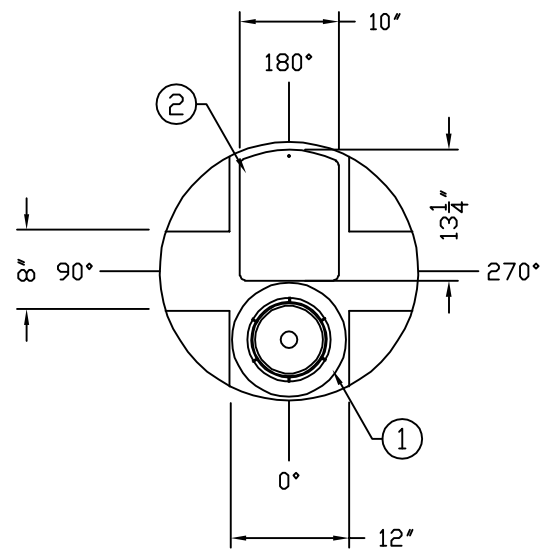

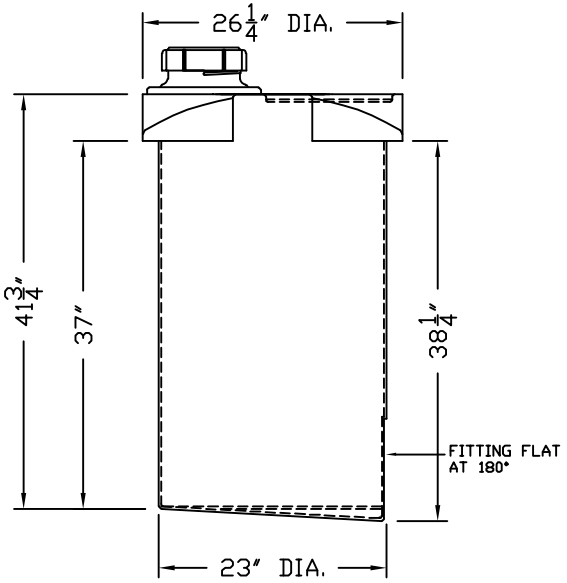

NOTES:
1 7″ ACCESS W/ THREADED LID AND RIM
2 MOLDED IN PUMP SHELF
3 PRIMARY CALCULATED GALLONS PER INCH: 1.743 GPI
4 CALCULATED STRAIGHT SIDE CAPACITY: 64.141 GAL.
5 SECONDARY CALCULATED GALLONS PER INCH: 2.257 GPI
6 CALCULATED STRAIGHT SIDE CAPACITY: 83.509 GAL.

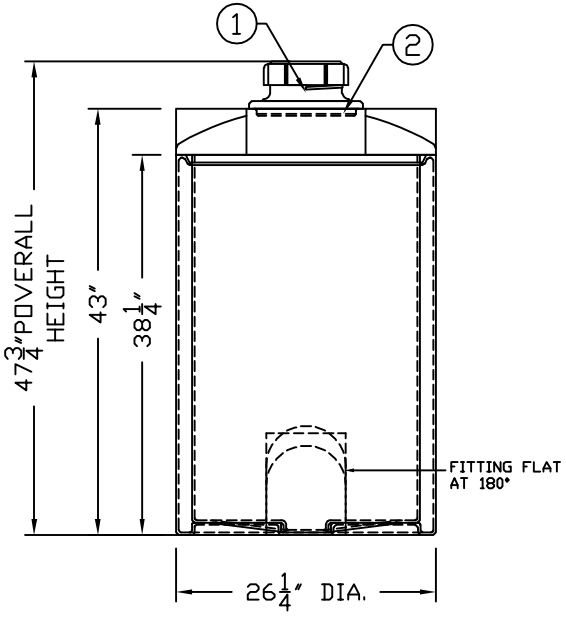

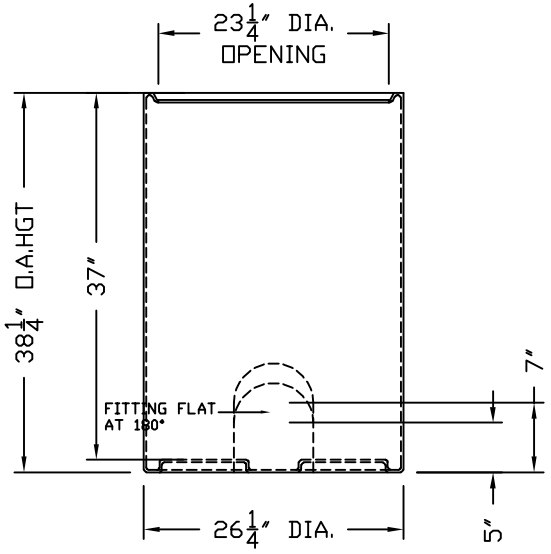

REV	REVISION DESCRIPTION	REV DATE
B	UPDATE SIDEVIEW OF TANK TO SHOW FTG FLAT AT 180°	1/18/25 JL
A	TURNED THE TANK 180° SO THE ACCESS IS AT 0°	6/11/08 MG

UNKNOWN

Aco Ammann CORPORATION OF AMERICA
300 N TAYLOR ROAD
GARRETT, IN 46738
PHONE: (260) 357-3181
FAX: (260) 357-3738

CUSTOMER APPROVAL

OVERALL TANK WEIGHT - LBS.

PRIMARY VESSEL		SECONDARY VESSEL	
SPECIFIC GRAVITY - SP.G. MAX		SPECIFIC GRAVITY - SP.G. MAX	
RESIN USED: - - POLYETHYLENE	TANK WEIGHT - LBS.	RESIN USED: - - POLYETHYLENE	TANK WEIGHT - LBS.
	TANK COLOR NATURAL		TANK COLOR NATURAL

TITLE IMT 65 GAL.
DOUBLE WALL STORAGE TANK
-

DRAWN BY: D. MYERS
DRAWN DATE: 10/22/03
DWG NUMBER: IMT65
REV A

ALL DIMENSIONS ARE IN INCHES AND ARE ±3%