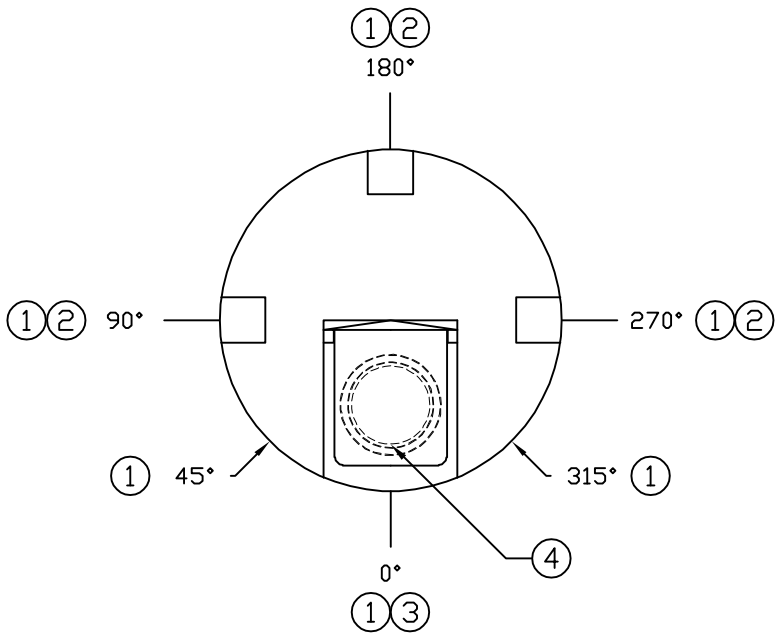

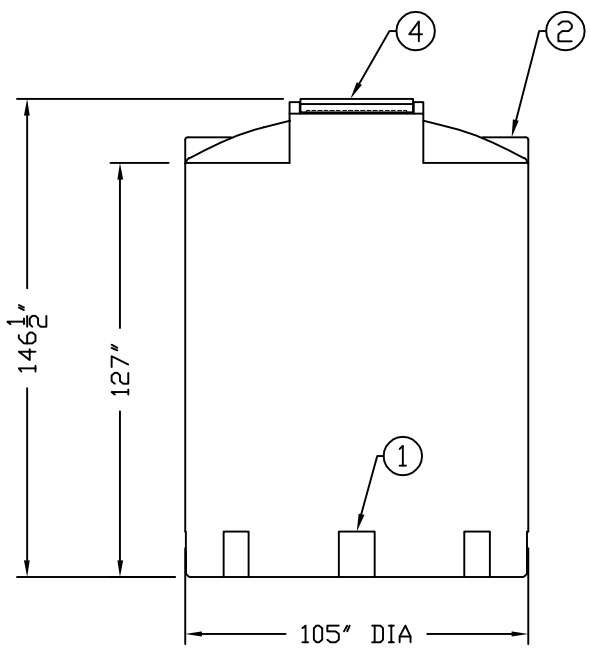

ACCESSORIES					
MK	SIZE	DESCRIPTION	DEG	ELEV	DOME

NOTES:
1 11" x 14" LOWER FLATS (6 PLACES)
2 14" x 14" DOME FLATS (3 PLACES)
3 40" x 52" DOME FLAT
4 24" MANWAY W/ HINGED COVER

REV	REVISION DESCRIPTION	REV DATE
-	-	-

Assmann CORPORATION OF AMERICA
300 N TAYLOR ROAD
GARRETT, IN 46738
PHONE: (260) 357-3181
FAX: (260) 357-3738

RESIN USED: - - POLYETHYLENE
TANK DESIGNED SPECIFIC GRAVITY - SP.G. MAX
TANK WEIGHT LBS.
TANK COLOR -

TITLE ICT 4600 GALLON VERTICAL STORAGE TANK

DRAWN BY: S. ROWLISON
DRAWN DATE: 7/6/2023
SALES ORDER#

ASSMANN CORPORATION

ALL DIMENSIONS ARE IN INCHES AND ARE ±3%

DWG NUMBER: ICT 4600
REV Ø